PORT SCHEDULE

MARK	SIZE	RATING	PART NO.
A	2" NPT	3000#	
B	1/2"	3000#	0156-250
	5/8" Std.	3000#	0156-625
	3/4"	3000#	0156-678

PARTS LISTING

MARK	PART NO.	QUAN.	DESCRIPTION	WEIGHT
1	0396	1	Swivel Assembly	33.00
Item 1 consists of the following (1a thru 1j):				
1a	0397	1	Head	8.50
1b	0365	1	Body	17.62
1c	0398	1	Sub	5.76
1d	0399B	52	Steel Balls	0.50
1e	0399A	2	Seal	0.19
1f	0399C	2	O-Ring	0.01
1g	8696-28025	1	Lock Screw	0.16
1h	8696-28024	1	Lock Screw	0.18
1j	0399D	2	Grease Zerk	0.09
2	0378	1	Handle	3.36
3	0377	1	Discharge Tube	13.91
4	8130-122	1	Coupling	2.19
5	0156-XXX (Ref. Port Sched).	1	Choke Nipple	3.75
			TOTAL WEIGHT (Lbs.):	56.21

P/N 0399, 2" Swivel Repair Kit contains Items 1d, 1e, 1f & 1J for one of the two swivel heads.

Two Repair Kits are required for the complete Swivel Assembly.

PLAN VIEW

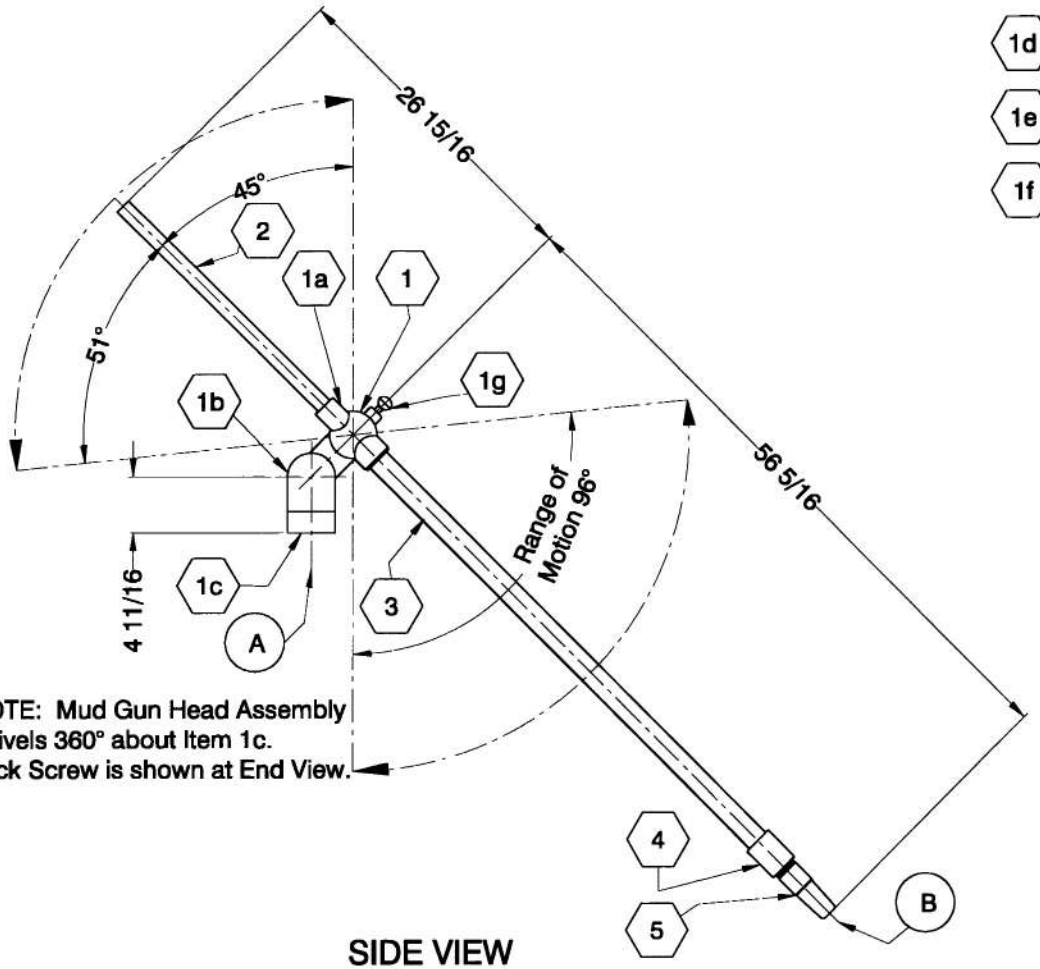

NOTE: Mud Gun Head Assembly swivels 360° about Item 1c.
Lock Screw is shown at End View.

SIDE VIEW

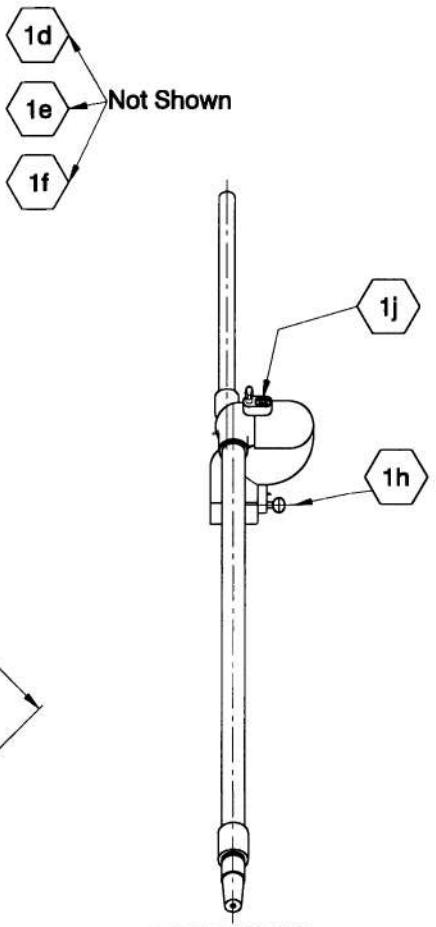

END VIEW

REVISIONS			
NO.	ZONE	DESCRIPTION	BY	DATE
1	All	General Revision	DH	9/23/99
2	All	Part Number	MW	12-27-02

NOTES

1. All dimensions are in inches unless otherwise noted.

NOTICE
The information contained herein is proprietary and may not be copied or transmitted to another party without the written consent of the owner, THE DOUBLE LIFE CORP., INC.

DoubleLife Corporation

TITLE
CUSTOMER DRAWING
INSTALLATION DRAWING & PARTS LISTING
2" PIVOT TYPE MUD GUN ASSEMBLY

PART NO.	DRAWN BY	DATE	SCALE
0341-0XX	MW	5/5/99	NTS

SHEET NO.	DRAWING NO.	REV. NO.	SIZE	SEQ.
1/1	99-00756	2	A	1

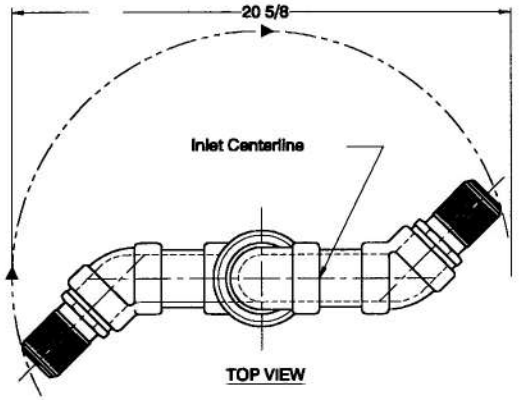

TOP VIEW

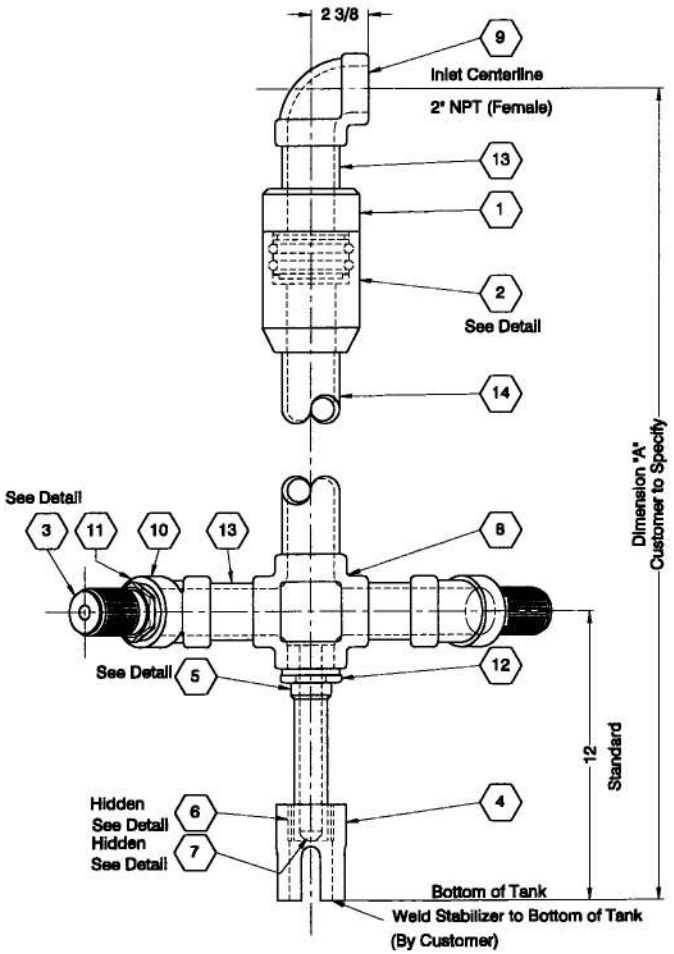

SIDE VIEW

BILL OF MATERIAL

MARK	PART NO.	QUAN.	DESCRIPTION	LENGTH	WIDTH	WEIGHT
1	0425B	1	Mud Gun Sub			6.09
2	0340-021	1	Mud Gun Body			9.09
3	0156-278	2	Choke Nipple - 7/8"			4.70
4	0340-042	1	Stabilizer Body	0'-4"		3.88
5	0340-053	1	Pivot Pin	0-7 1/8"		2.04
6	0340-064-M	1	Pivot Bushing	0'-1 1/2"		0.39
7	0340-075	1	Pivot Pin Plug	7/8" Dia.		0.06
8	0340-086	1	Cross			5.00
9	0340-097	1	Top Elbow			3.38
10	0340-108	2	Bottom Elbow			5.28
11	8130-122	2	Coupling			1.68
12	0340-129	1	Coupling			0.84
13	0340-130	3	Riser	0'-3"		3.78
14	0379	1	Discharge Tube	Varies (See Below)		(See Below)
*15	0399D	1	Grease Zerk			0.01
*16	0399E	1	Plug			0.02
*17	0399A	1	Seal			0.19
*18	0399B	30	Steel Ball			0.28
*19	0399C	1	O-Ring			00.00
					**TOTAL WEIGHT (Lbs.):	**46.69

*Not Shown on Drawing
**Does Not Include Weight of Item 14. See Calculation Below.

Item 14 Length = Dimension"A" (inches) - 24 1/16"
Item 14 Weight = Item 14 Length (inches) X 0.418 lbs./in.

REVISIONS

NO.	ZONE	DESCRIPTION	BY	DATE
1	All	General Revision	DH	01/27/97

NOTES

1. All dimensions are in inches unless otherwise noted.

NOTICE
The information contained herein is proprietary and may not be copied or transmitted to another party without the written consent of the owner, THE DOUBLE LIFE CORP., INC.

DoubleLife Corporation

TITLE
INSTALLATION DRAWING
2" SPINNER-TYPE MUD GUN

PART NO.	DRAWN BY	DATE	SCALE
0340-XXXXX	JDH	1/27/97	NTS

SHEET NO.	DRAWING NO.	REV. NO.	SIZE	SHT.
1/1	99-00802	1	A	1

PORT SCHEDULE

MARK	QUAN.	DESCRIPTION	SIZE
A	1	Inlet	2" NPT
B	1	Discharge	5/8" Orifice

BILL OF MATERIALS

				3000# P/N 0342-XXXXX		6000# P/N 0343-XXXXX	
MARK	QUAN.	DESCRIPTION	LENGTH	PART NO.	WEIGHT	PART NO.	WEIGHT
1	1	2" 90° Elbow		8201-165	5.44	8201-166	13.00
2	1	1 1/2" 90° Elbow		8201-122	4.88	8201-126	7.06
3	1	2" Riser	3	8481-0163208	1.26	8481-0163209	2.26
4	1	2" Swivel Assembly		0425	17.50	0425	23.00
4A	1	Thumb Screw (Part of Item 4)		8696-28024	[0.19]	8696-28024	[0.19]
4B	2	Grease Fitting (Part of Item 4)		720782	[0.13]	780782	[0.13]
5	1	Jet Nozzle, 1-1/2" x 6" Long, 5/8" Bore		0156-625	4.00	0156-625	4.00
6	1	Handle Assembly		0429	8.60	0429	8.60
6A	1	Handle Bracket (Part of Item 6)		0352	[5.24]	0352	[5.24]
6B	1	Arm (Part of Item 6)		0353	[3.36]	0353	[3.36]
7	2	Bolt, HH, Gr. 5, Plated 1/2-13, 1" L.		B03F52081300016	0.23	B03F52081300016	0.23
8	2	Lockwasher, Std. Spiral, Plated, 1/2"		L03052000008000	0.06	L03052000008000	0.06
9	1	1 1/2" Discharge Tube	Note 1	0430-XXXXX	Note 2	0433-XXXXX	Note 2
10		Swivel Assembly Repair Kit		0366		0366	
				WEIGHT [Items 1 thru 8] (Lbs.):	41.97		58.21

NOTE 1: 3000# (P/N 0342-XXXXX): Length = Dim. A - 13 1/4"
6000# (P/N 0343-XXXXX): Length = Dim. A - 14 3/4"
NOTE 2: 3000# (P/N 0342-XXXXX): Weight = Length (Ft.) x 5.02 Lb./Ft.
3000# (P/N 0343-XXXXX): Weight = Length (Ft.) x 6.41 Lb./Ft.

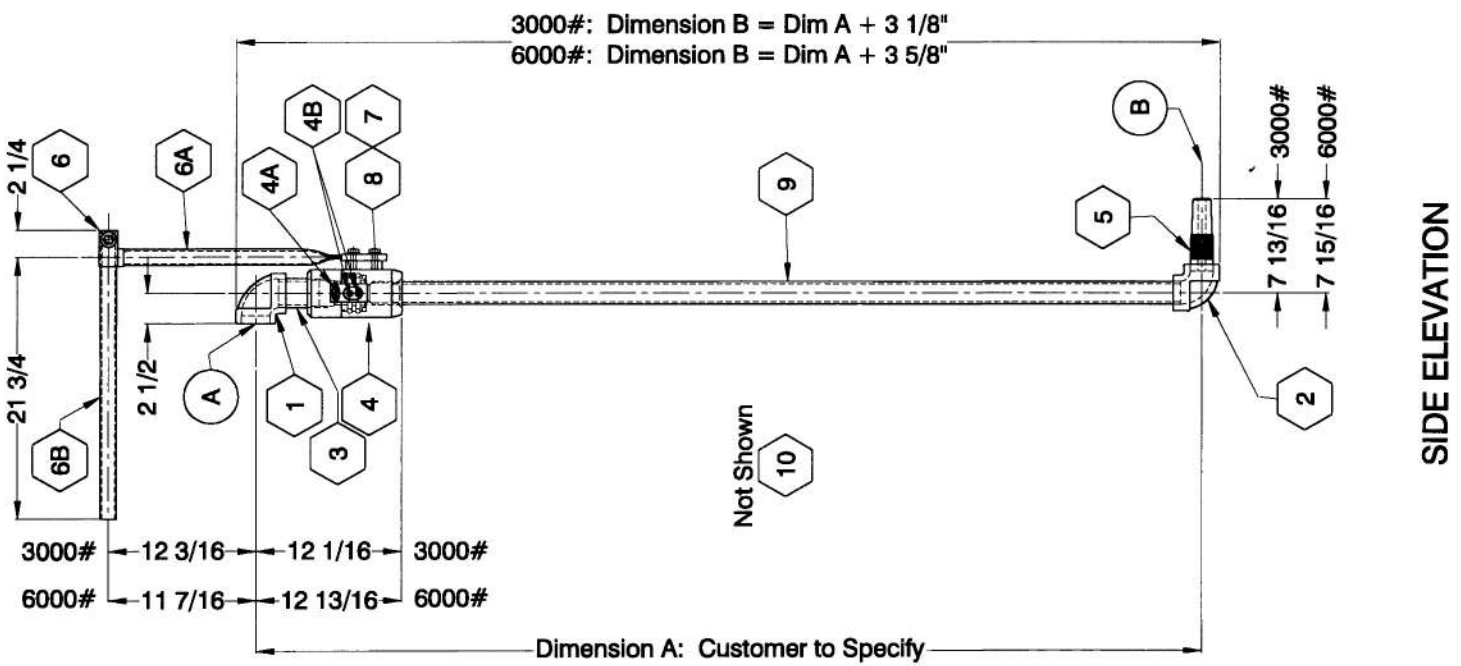

SIDE ELEVATION

REVISIONS				
NO.	ZONE	DESCRIPTION	BY	DATE

NOTES

1. All dimensions are in inches unless otherwise noted.

NOTICE
The information contained herein is proprietary and may not be copied or transmitted to another party without the written consent of the owner, THE DOUBLE LIFE CORP., INC.

DoubleLife Corporation

TITLE
INSTALLATION DRAWING & PARTS LISTING
2" HIGH PRESSURE
BOTTOM-TYPE MUD GUN

PART NO.	DRAWN BY	DATE	SCALE
0342-XXXXX	JDH	5/29/01	NTS

SHEET NO.	DRAWING NO.	REV. NO.	SIZE	SHO.
1/1	99-00209	0	A	1

PORT SCHEDULE

MARK	QUAN.	DESCRIPTION	SIZE
A	1	Inlet	3" NPT
B	1	Discharge	3/4" Orifice

BILL OF MATERIALS

MARK	PART NO.	QUAN.	DESCRIPTION	LENGTH	WIDTH	WEIGHT
1	8201-241	2	3" 90° Elbow			10.72
2	8481-024-2208	1	3" L.P. Riser	4		2.53
3	0427	1	3" L.P. Swivel Assembly			24.87
4	0153-3330	1	Jet Nozzle, Rubber, 3" x 3/4" Bore, 7 5/8" L.			3.00
5	0429	1	Handle Assembly			8.15
6	B03F52081300016	2	Bolt, HH, Gr. 5, Plated 1/2-13, 1" L.			0.23
7	L03052000005000	2	Lockwasher, Std. Spiral, Plated, 1/2"			0.06
8	0434-XXXXX	1	3" L. P. Discharge Tube	Note 1		Note 2
			WEIGHT [Items 1 thru 7] (Lbs.):			49.56

NOTE 1: Length = Dim. A - 13 15/16
NOTE 2: Weight = Length (Ft.) x 7.58 Lb./Ft.

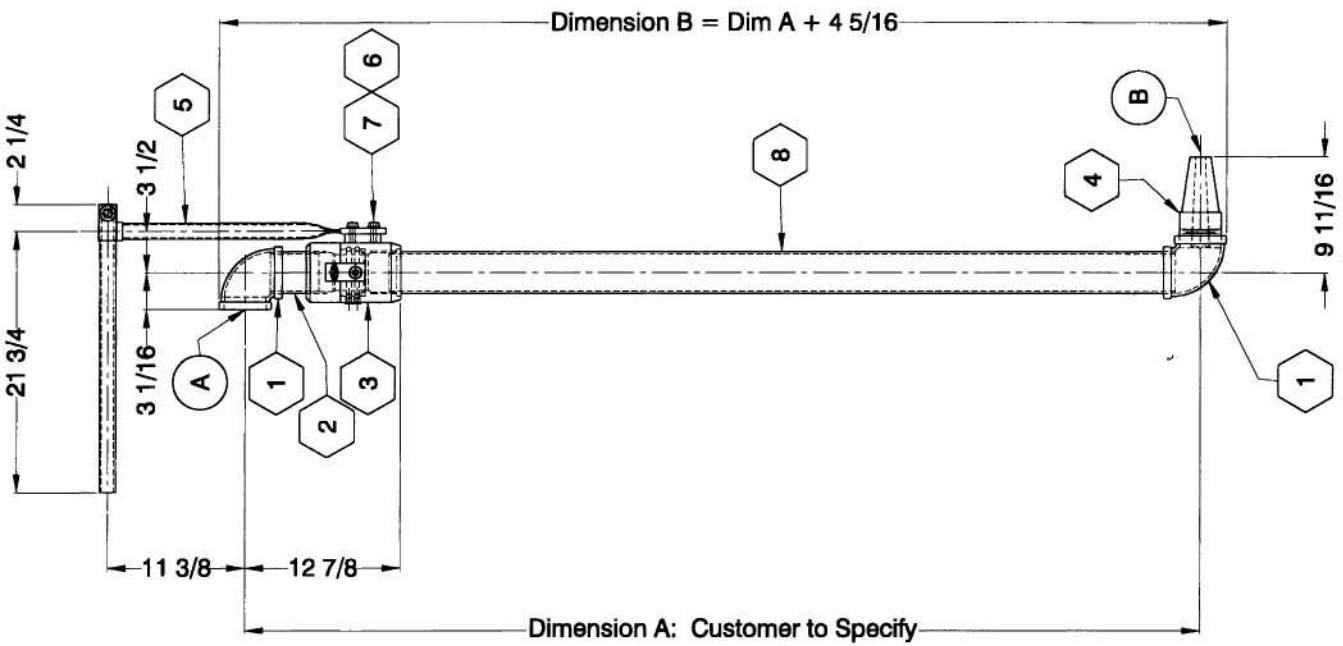

SIDE ELEVATION

REVISIONS

NO.	ZONE	DESCRIPTION	BY	DATE
1	All	General Revision	DH	4/27/00
2		X-ed Item 4 frm. P/N 8482-24122, & Port B Size	DH	11/16/0.
3		X-ed Item 4 to new design; description & weight	DH	3/29/02

NOTES

1. All dimensions are in inches unless otherwise noted.

NOTICE
The information contained herein is proprietary and may not be copied or transmitted to another party without the written consent of the owner, THE DOUBLE LIFE CORP., INC.

DoubleLife

TITLE INSTALLATION DRAWING
GENERAL ARRANGEMENT

3"LP BOTTOM-TYPE MUD GUN

PART NO.	DRAWN BY	DATE	SCALE
0344-XXXXX	JDH	1/24/98	NTS

SHEET NO.	DRAWING NO.	REV. NO.	SIZE	SHEET
1/1	99-00341	3	A	1

6" HOPPER OPERATING DATA

Choke Nipple Bore:	2" [51 mm]	
Pressure:	40 - 65 psi [2.812-4.569 Kg/cm^2]	
	MUD	BULK SOLIDS
Volume:	725-965 gpm [2744-3653 lpm]	600 lb/min. [273 Kg./min.]
Volume with Venturi:		700 lb./min. [318 Kg./min.]

6" MUD HOPPER

MARK	PART NO.	QUAN.	DESCRIPTION	WEIGHT
1	0355	1	6" Mud Hopper (without Venturi)	300.00
2	0141	1	6" Venturi	51.00
3	0128	1	6" (Top Part) Cone with Table	119.00
4	BG0600411125	1	6" Butterfly Valve	22.75
5	12089	1	6" Flange Assembly	18.36
6	8080-48241	1	Bushing for 6" Hopper	7.75
7	312-200	1	Jet Nipple with 2" Bore (Standard Item with Hopper Order)	14.75
8	312-150	1	Jet Nipple with 1-1/2" Bore (Must be specified with Hopper Order)	17.33
9	0364	1	Tee with Stand for 6" Hopper	93.12
10	N19052121000000	16	Hex Nut, 3/4"	1.90
11	B16092121000080	8	Stud Bolt, 3/4"	5.00

4" HOPPER OPERATING DATA

Choke Nipple Bore:	3/4" [19 mm]	
Pressure:	40 - 60 psi [2.812-4.218 Kg/cm^2]	
	MUD	BULK SOLIDS
Volume:	110-140 gpm [426-530 lpm]	100 lb/min. [46 Kg./min.]
Volume with Venturi:		117 lb./min. [53 Kg./min.]

4" MUD HOPPER

MARK	PART NO.	QUAN.	DESCRIPTION	WEIGHT
1	0354	1	4" Mud Hopper (without Venturi)	175.00
2	0140	1	4" Venturi	40.25
3	0100	1	4" (Top Part) Cone with Table	84.66
4	BG0400411125	1	4" Butterfly Valve	14.75
5	0165	1	4" Flange Assembly	7.40
6	808-32161	1	Bushing for 4" Hopper	3.11
7	210-175	1	Jet Nipple with 3/4" Bore (Standard Item with Hopper Order)	8.00
8	Not Used			
9	0363	1	Tee with Stand for 4" Hopper	52.08
10	N19052101100000	16	Hex Nut, 5/8"	1.17
11	B16092101100080	8	Stud Bolt, 5/8"	3.48

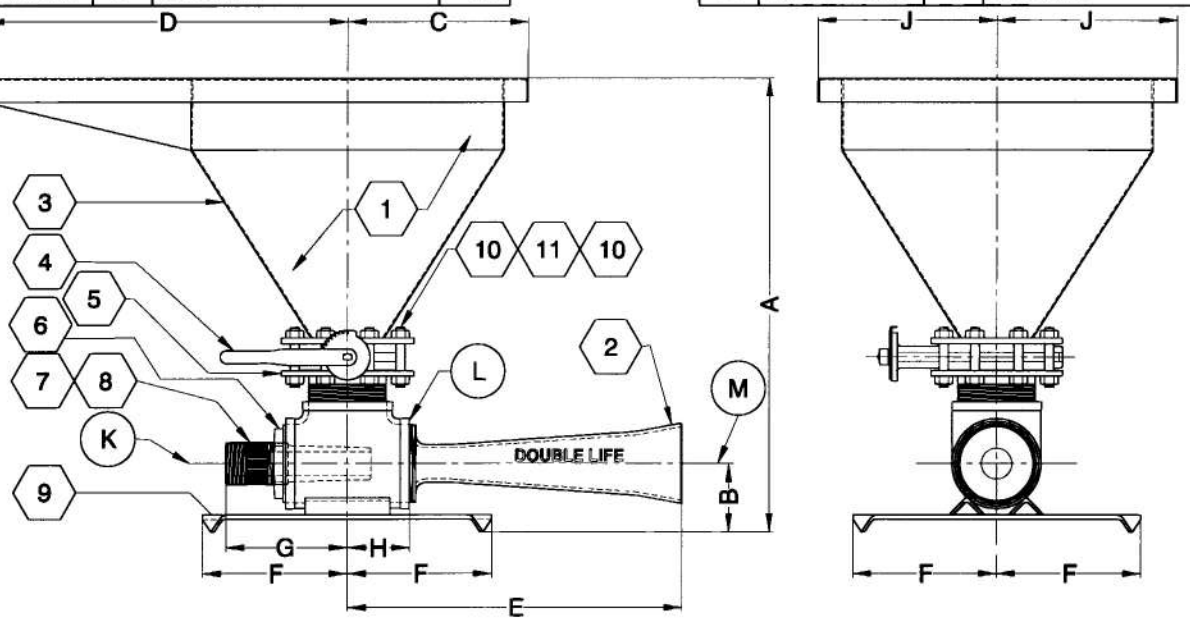

SIZE	DIMENSIONS																		PORT DESIGNATIONS		
	A		B		C		D		E		F		G		H		J		K	L	M
	Inches	mm	Inches	mm	Inches	mm	Inches	mm	Inches	mm	Inches	mm	Inches	mm	Inches	mm	Inches	mm			
4" Hopper	37	940	4 3/4	121	12	305	24	610	26 5/8	667	9	229	8 5/8	219	3 13/16	97	12	305	2" NPTM	4" NPTF	6" Pipe
6" Hopper	37 3/4	959	5 3/4	146	15	381	30	762	27 13/16	706	12	305	10 1/16	256	5 1/8	130	15	381	3" NPTM	6" NPTF	6" Pipe

REVISIONS

NO.	ZONE	DESCRIPTION	BY	DATE
1		X-ed 6" Mud Vol. frm 1100-1400gpm	DH	7/19/01
1		X-ed 6: Press. frm 40-60 psi	DH	7/19/01
1		Rem. 4" Mud Vol. w/ Venturi	DH	7/19/01

NOTES

1. All dimensions are in inches unless otherwise noted.

NOTICE

The information contained herein is proprietary and may not be copied or transmitted to another party without the written consent of the owner, THE DOUBLE LIFE CORP., INC.

DoubleLife Corporation

TITLE

CUSTOMER DRAWING
MODEL 0355, 6" MUD HOPPER
MODEL 0354, 4" MUD HOPPER
DIMENSIONS & PARTS LISTING

PART NO.	DRAWN BY	DATE	SCALE
See Above	JDH	1/21/00	NTS

SHEET NO.	DRAWING NO.	REV. NO.	SIZE	SEQ.
1/1	99-00606	1	A	1

BILL OF MATERIAL				
MARK	PART NO.	QUAN.	DESCRIPTION	WEIGHT
1	F601	1	Skid	262.79
2	01020	1	6" In-Line Shearing Device	243.60
3	0355	1	6" Hopper Assembly	305.00
4	0141	1	6" Venturi Tube	49.50
5	F602	1	6" Std. Piping Assembly	374.75
			TOTAL WEIGHT (Lbs.):	1235.64

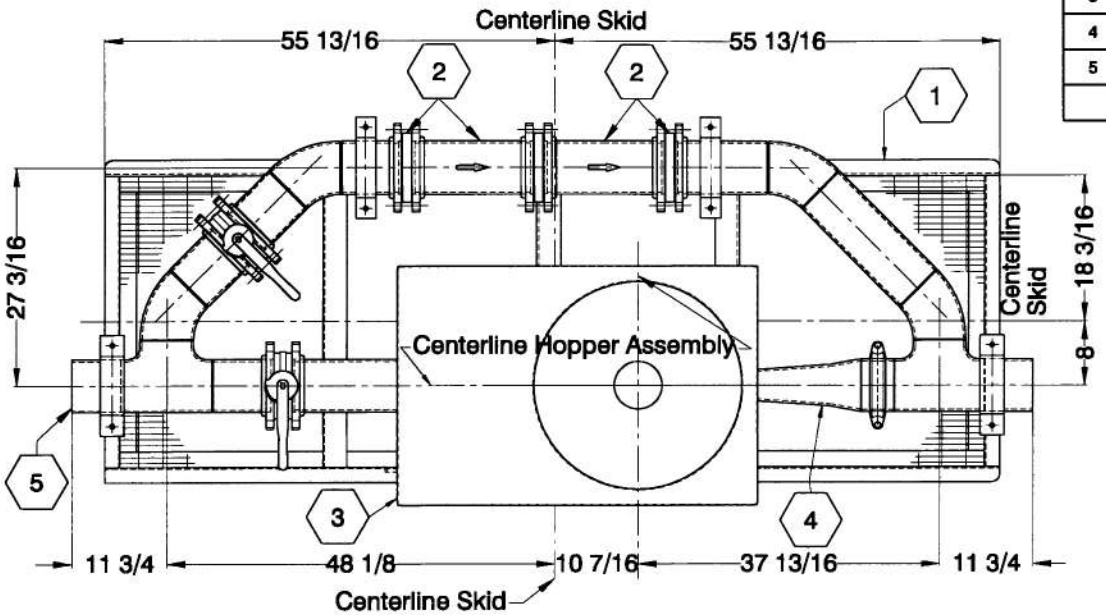

PLAN VIEW

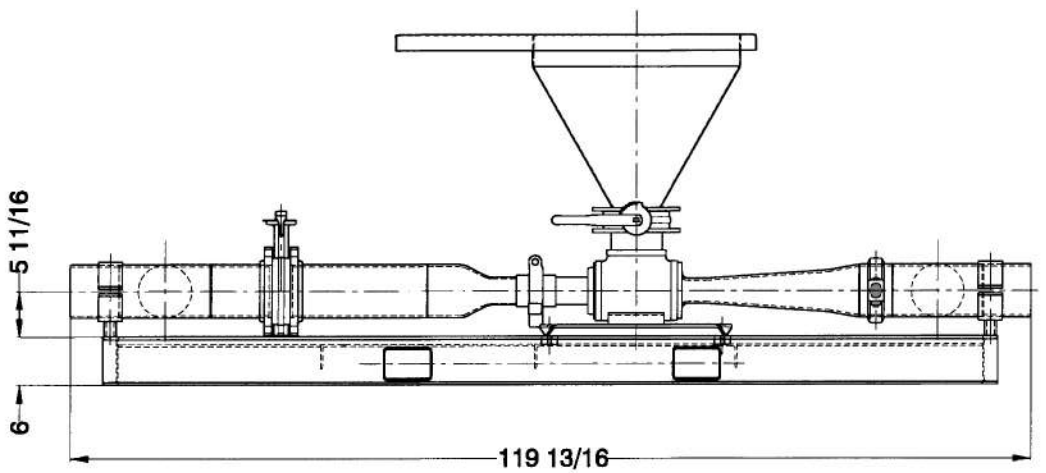

SIDE ELEVATION VIEW

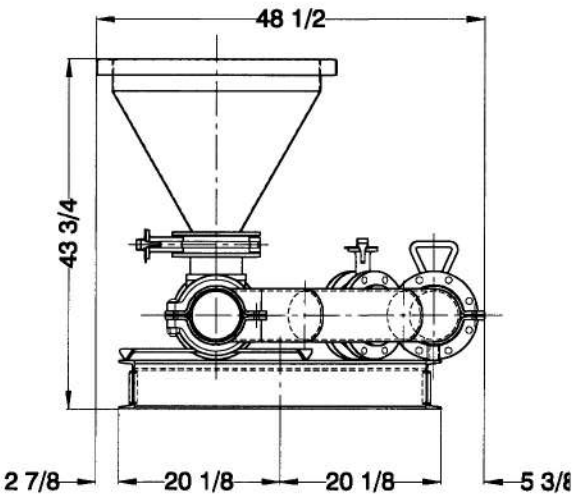

END ELEVATION VIEW

REVISIONS			
NO.	ZONE	DESCRIPTION	BY	DATE
1		X-ed Union frm. F.S. Hex to Hammer Union	DH	12/20/97

NOTES

1. All dimensions are in inches unless otherwise noted.

NOTICE

The information contained herein is proprietary and may not be copied or transmitted to another party without the written consent of the owner, THE DOUBLE LIFE CORP., INC.

DoubleLife Corporation

TITLE

INSTALLATION DRAWING

6" MUD HOPPER WITH VENTURI & 6" IN-LINE SHEARING DEVICE

PART NO.	DRAWN BY	DATE	SCALE
	JDH	4/8/97	NTS

SHEET NO.	DRAWING NO.	REV. NO	SIZE	SEQ.
1/1	99-00603	1	A	1

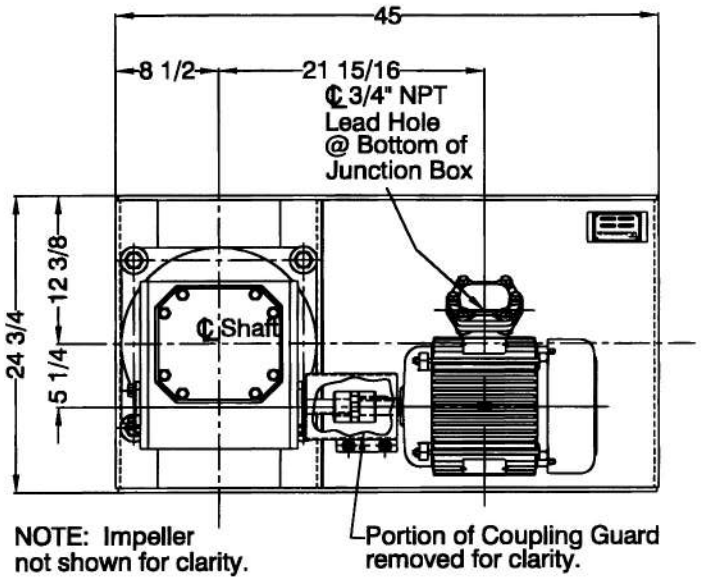

PLAN VIEW

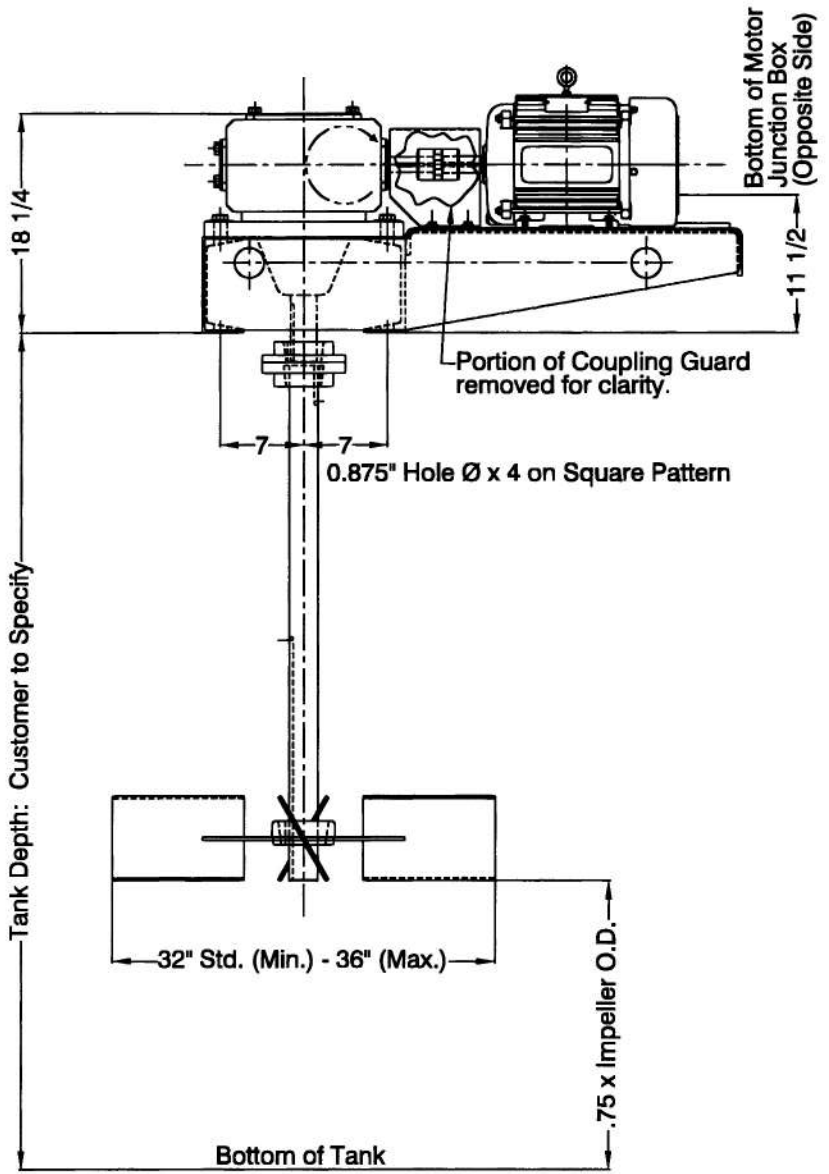

SIDE VIEW

REVISIONS				
NO.	ZONE	DESCRIPTION	BY	DATE
1	All	General Revision	DH	11/24/99

NOTES

1. All dimensions are in inches unless otherwise noted.

NOTICE
The information contained herein is proprietary and may not be copied or transmitted to another party without the written consent of the owner, THE DOUBLE LIFE CORP., INC.

DoubleLife

TITLE

INSTALLATION DRAWING

MODEL NO. MA-7.5-301
7-1/2 H.P. MECHANICAL AGITATOR

PART NO.	DRAWN BY	DATE	SCALE
MA7.5-301	JDH	1/28/97	NTS

SHEET NO.	DRAWING NO.	REV. NO.	SIZE	SEQ.
1/1	99-00330	1	A	1

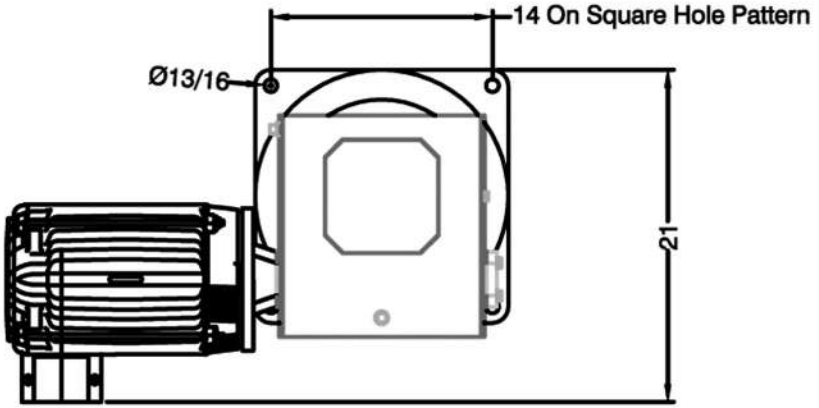

PLAN VIEW

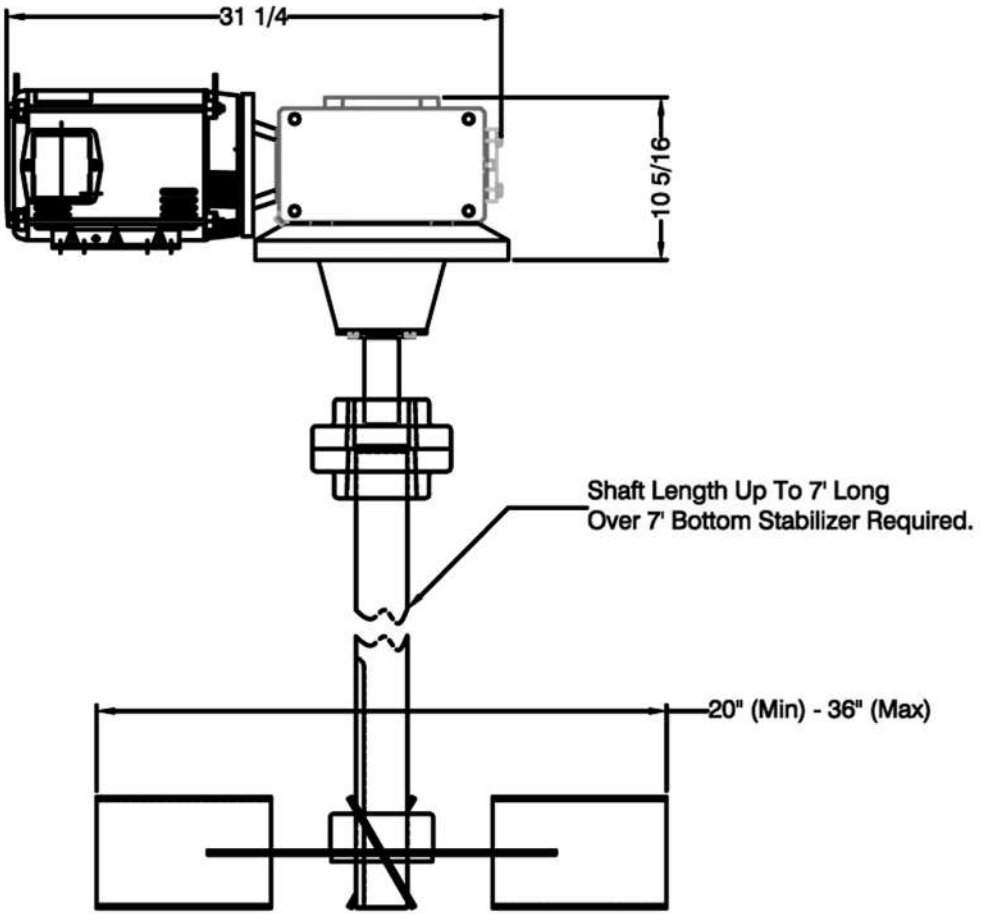

SIDE VIEW

REVISIONS				
NO.	ZONE	DESCRIPTION	BY	DATE

NOTES

1. All dimensions are in inches unless otherwise noted.

NOTICE
The information contained herein is proprietary and may not be copied or transmitted to another party without the written consent of the owner, THE DOUBLE LIFE CORP., INC.

DoubleLife Corporation

TITLE

CUSTOMER DRAWING

CLOSED COUPLED AGITATOR

PART NO.	DRAWN BY	DATE	SCALE
	MW	2-18-03	NTS

SHEET NO.	DRAWING NO.	REV. NO.	SIZE	REQ.
1/1	99-00492	0	A	

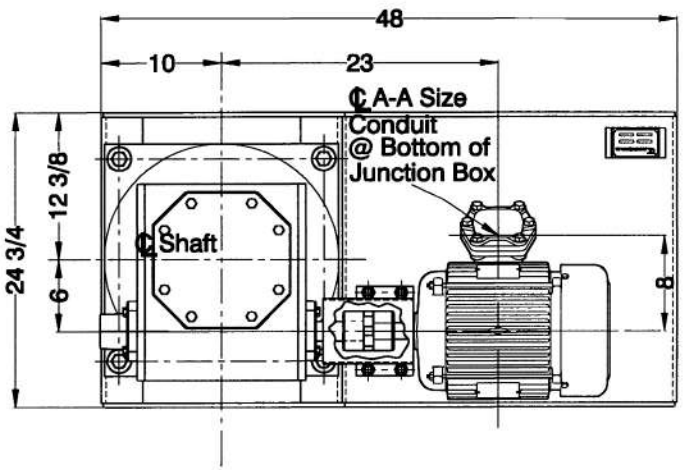

NOTE: Impeller
not shown for clarity.

PLAN VIEW

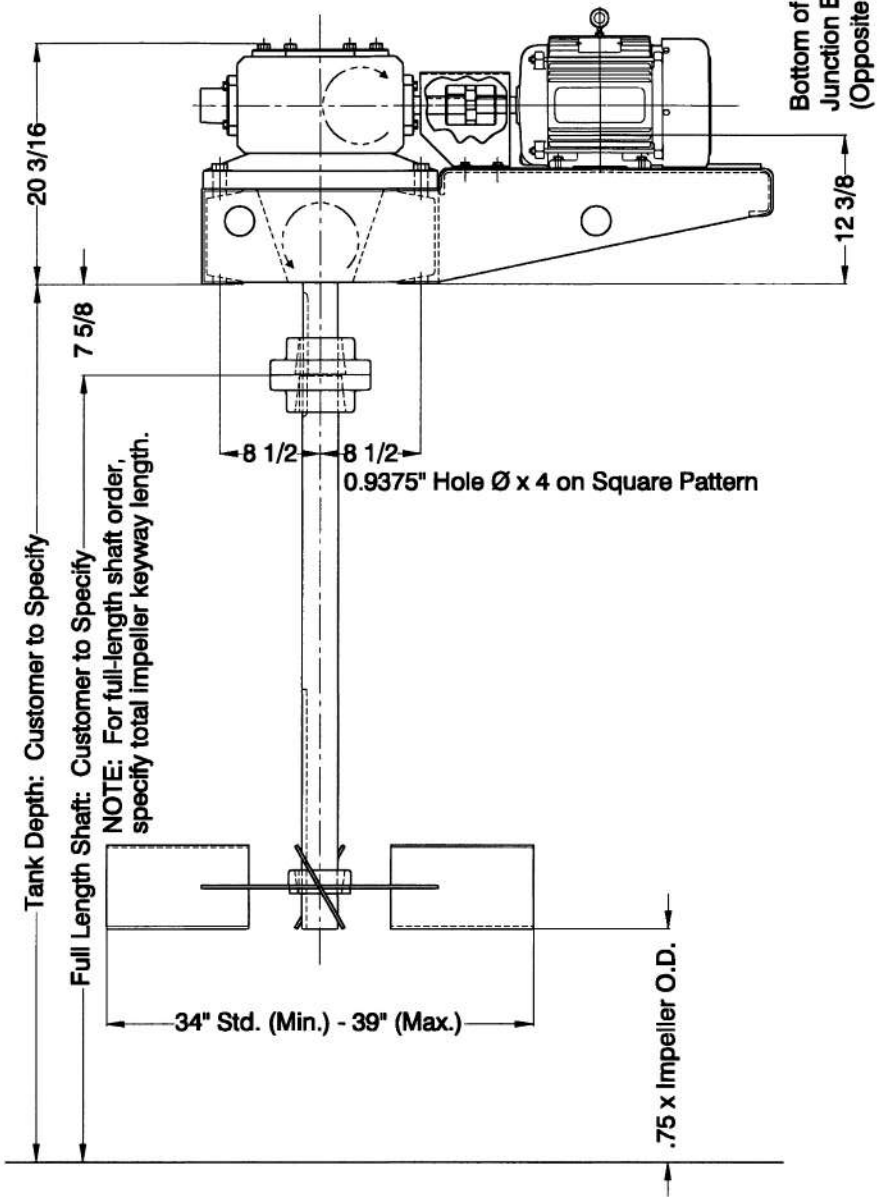

REVISIONS				
NO.	ZONE	DESCRIPTION	BY	DATE
1		X-ed dimen. @ Plan CL to end, from 8-3/4"to 10".	DH	1/8/98
2	All	+Full-Length Shaft Notes & Dimen.	DH	4/11/9
3		General Revision	DH	6/18/02

NOTES

1. All dimensions are in inches unless otherwise noted.

NOTICE
The information contained herein is proprietary and may not be copied or transmitted to another party without the written consent of the owner, THE DOUBLE LIFE CORP., INC.

DoubleLife

TITLE

INSTALLATION DRAWING

MODEL NO. MA-10-301
10 H.P. MECHANICAL AGITATOR

PART NO.	DRAWN BY	DATE	SCALE
MA10-301	JDH	1/28/97	NTS

SHEET NO.	DRAWING NO.	REV. NO.	SIZE	SEQ.
1/1	99-00320	3	A	1

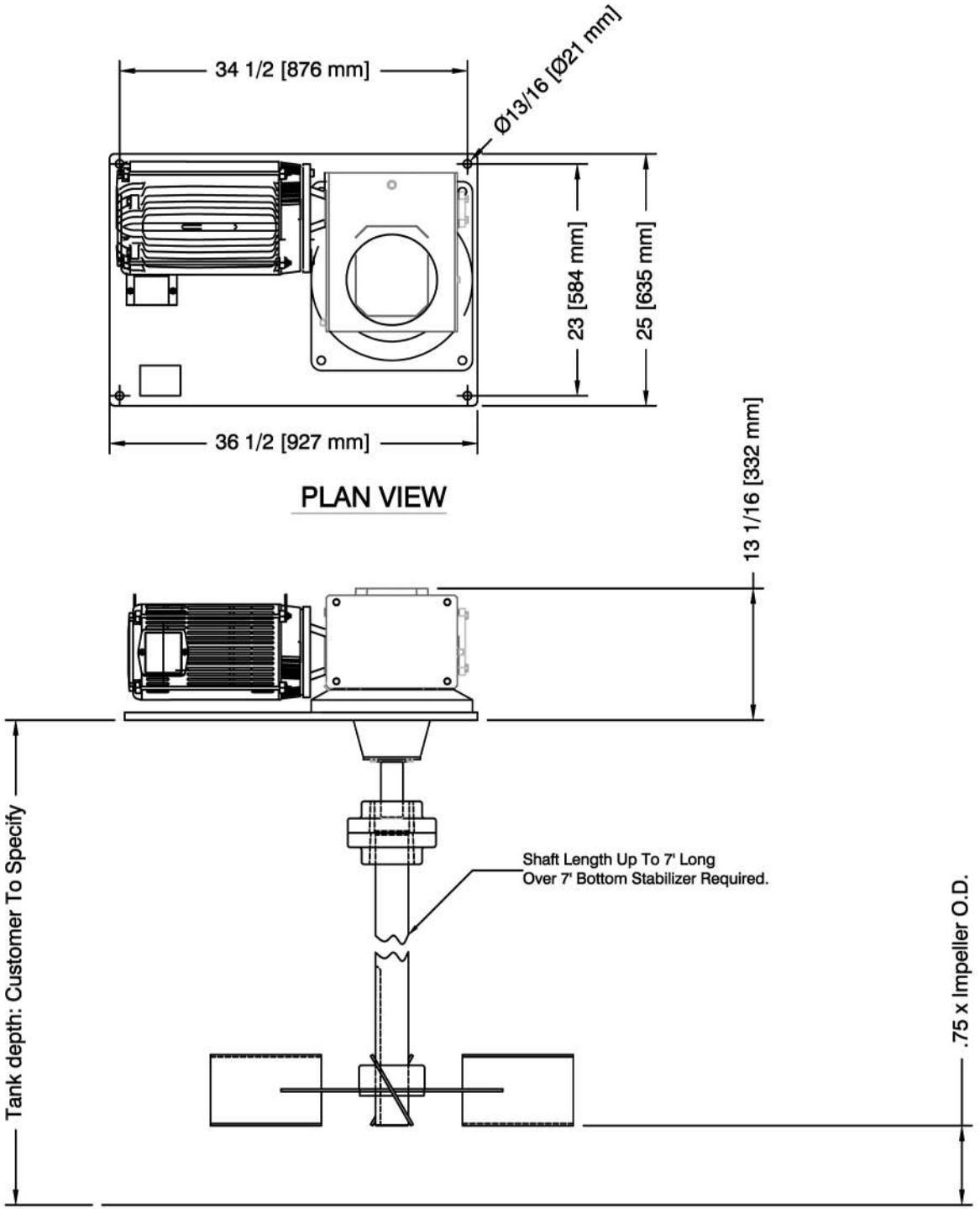

REVISIONS			
NO.	ZONE	DESCRIPTION	BY	DATE

NOTES

1. All dimensions are in inches unless otherwise noted.

NOTICE
The information contained herein is proprietary and may not be copied or transmitted to another party without the written consent of the owner, THE DOUBLE LIFE CORP., INC.

DoubleLife Corporation

TITLE

DIMENSIONAL DRAWING
MUD AGITATOR
CLOSE COUPLED

PART NO.	DRAWN BY	DATE	SCALE
MA10-301CC	MW	8-6-03]	NTS

SHEET NO.	DRAWING NO.	REV. NO.	SIZE	SEQ.
1/1	99-00496	0	A	1

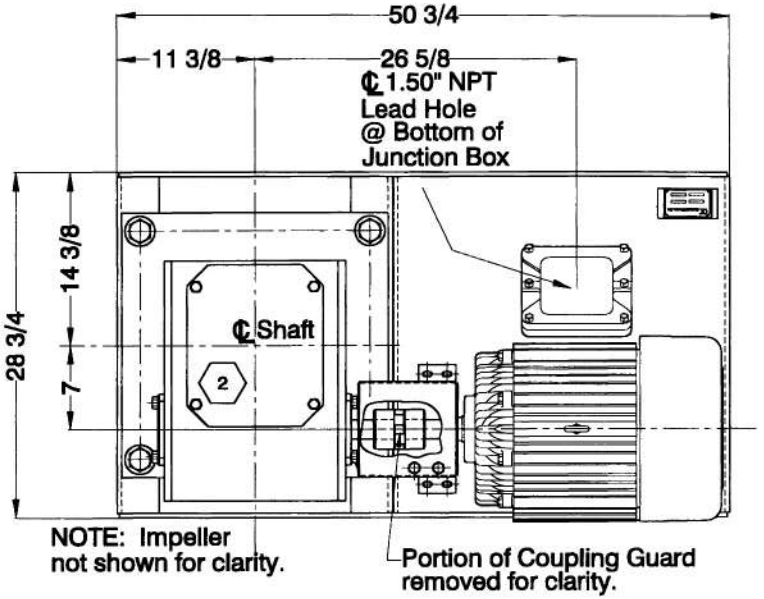

PLAN VIEW

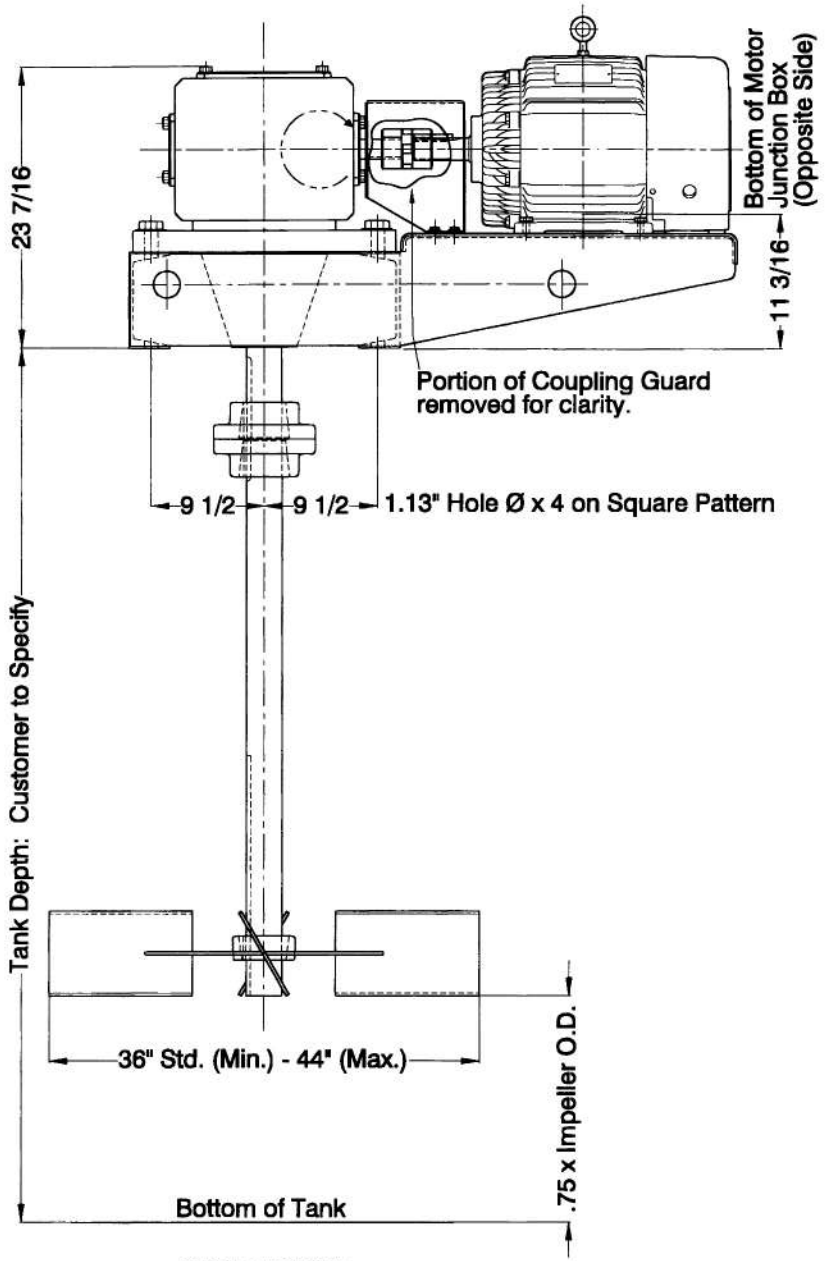

SIDE VIEW

REVISIONS				
NO.	ZONE	DESCRIPTION	BY	DATE

NOTES

1. All dimensions are in inches unless otherwise noted.

NOTICE
The information contained herein is proprietary and may not be copied or transmitted to another party without the written consent of the owner, THE DOUBLE LIFE CORP., INC.

DoubleLife Corporation

TITLE

INSTALLATION DRAWING

MODEL NO. MA15-201
15 H.P. MECHANICAL AGITATOR

PART NO.	DRAWN BY	DATE	SCALE
MA15-201	JDH	4/19/01	NTS

SHEET NO.	DRAWING NO.	REV. NO.	SIZE	SEQ.
1/1	99-00315	0	A	1

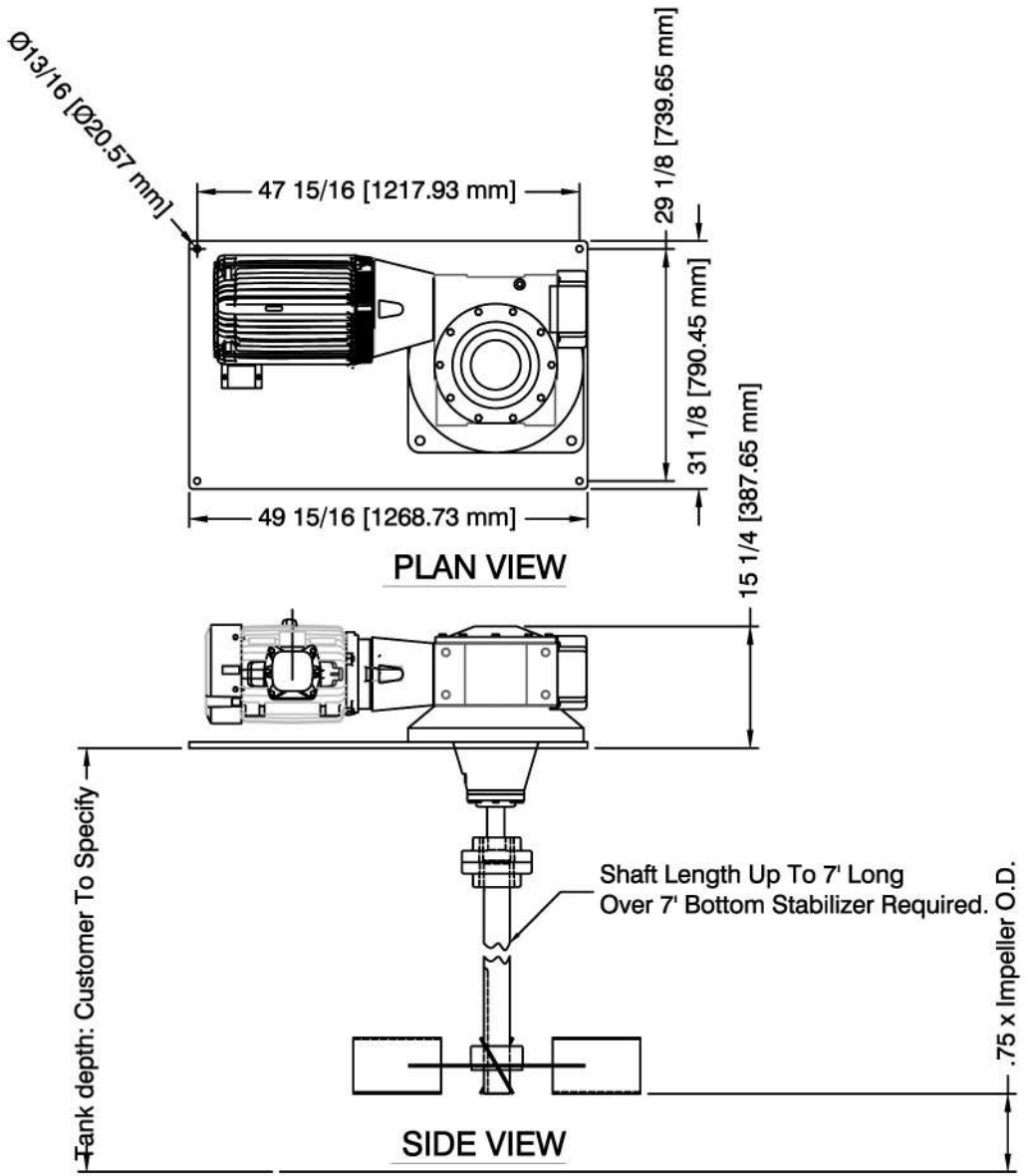

REVISIONS			
NO.	ZONE	DESCRIPTION	BY	DATE

NOTES

1. All dimensions are in inches unless otherwise noted.

NOTICE
The information contained herein is proprietary and may not be copied or transmitted to another party without the written consent of the owner, THE DOUBLE LIFE CORP., INC.

DoubleLife Corporation

TITLE

PROCESSOR DRAWING

CLOSE COUPLED AGITATOR

PART NO.	DRAWN BY	DATE	SCALE
MA15-251CC	MW	11-24-03	Noted

SHEET NO.	DRAWING NO.	REV. NO.	SIZE	SEQ.
1/1	99-00503	0	A	1